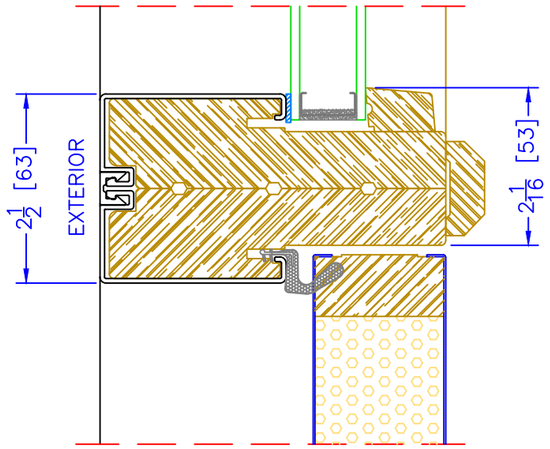

4 9/16" INSWING TRANSOM o/ OPERATOR
HORIZONTAL MULLION

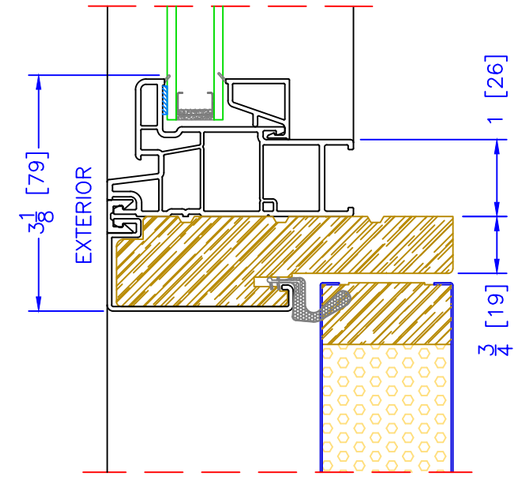

4 9/16" INSWING SHAPE o/ OPERATOR
HORIZONTAL MULLION

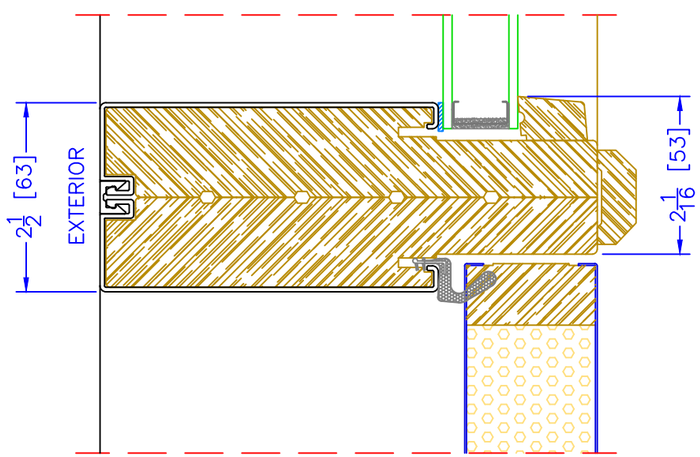

6 9/16" INSWING TRANSOM o/ OPERATOR
HORIZONTAL MULLION

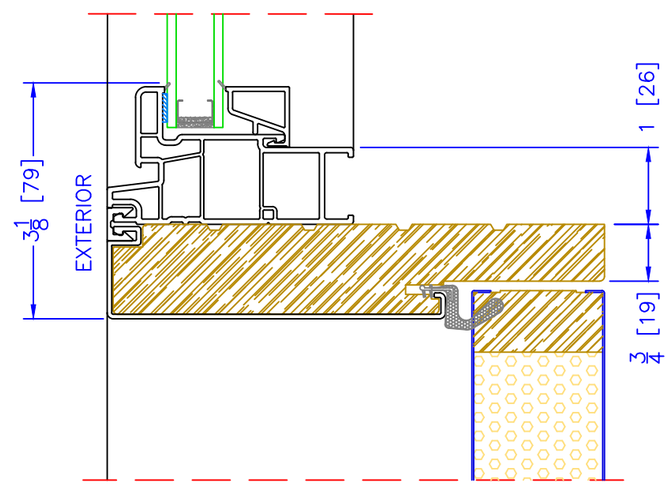

6 9/16" INSWING SHAPE o/ OPERATOR
HORIZONTAL MULLION

Kohltech Windows & Entrance Systems	Title: VINYL CLAD ENTRANCE DOOR INSWING HORIZONTAL MULLIONS	Filename: X_Entrance Doors _Vinyl Clad Scale: 1:2	Drawn By: LAURA M. Date: JAN 28 2025 Units: Inches [mm]