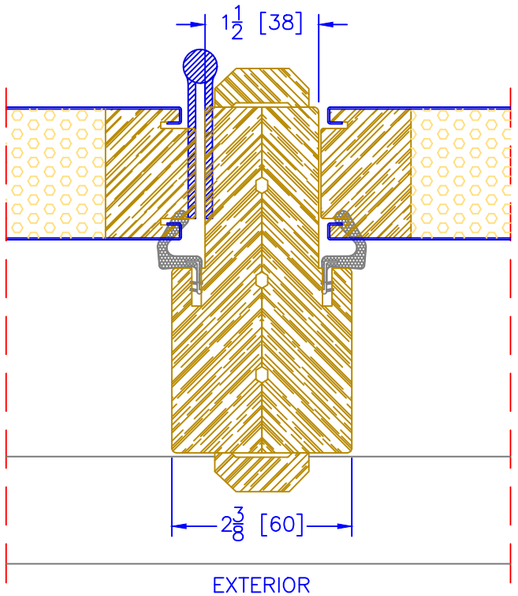

4 9/16" INSWING OPERATOR/SIDELITE
VERTICAL MULLION

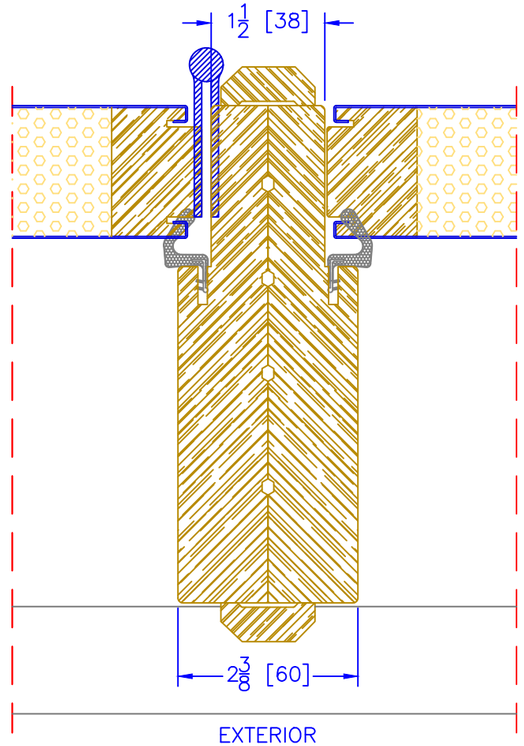

6 9/16" INSWING OPERATOR/SIDELITE
VERTICAL MULLION

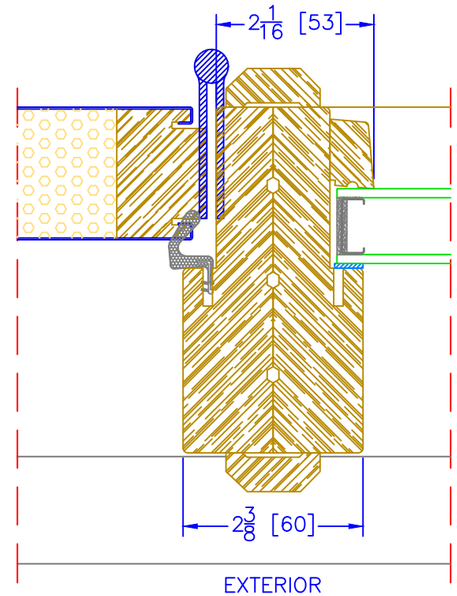

4 9/16" INSWING OPERATOR/S-100
VERTICAL MULLION

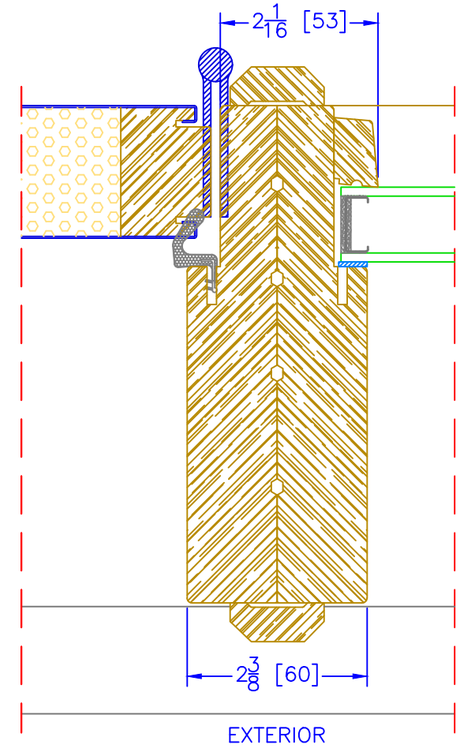

6 9/16" INSWING OPERATOR/S-100
VERTICAL MULLION

Kohltech Windows & Entrance Systems	Title: WOOD ENTRANCE DOOR INSWING VERTICAL MULLIONS	Filename: X_Entrance Doors _Wood	Drawn By: LAURA M.
			Date: JAN 29 2025
		Scale: 1:2	Units: Inches [mm]